Revision Notes.				
R1 -				
APA: -	Drawn:-	Checked:-	Approved:-	Date: -

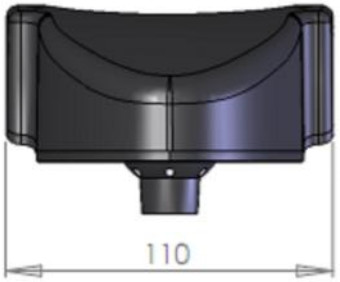

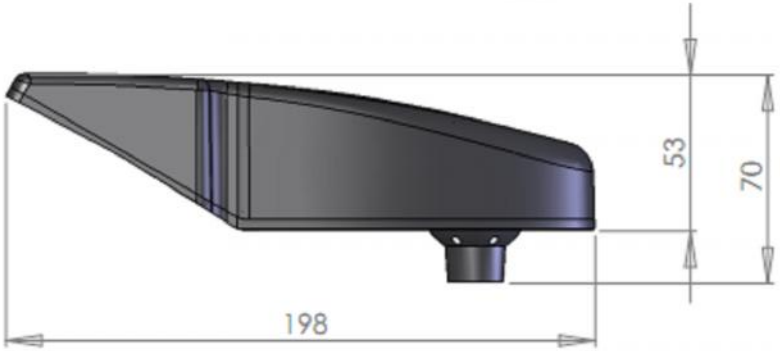

momax germany GmbH
Essen

Weitergabe sowie Vervielfältigung dieser Zeichnung,Verwertung und Mitteilung ihres Inhalts nicht gestattet, soweit nicht ausdrücklich zugestanden. Zuwiderhandlung verpflichtet zu Schadensersatz. Alle Rechte für den Fall der Patenterteilung oder Gebrauchsmuster-Eintragung vorbehalten.

Beutell	Anzahl	
Anwendung :		

Toleranz: ISO 2768-m

Material

Oberfläche

	NAME	Datum
Bearb.	FW	13.12.12
Gepr.		
Gepr. 1		
OB		

Bemerkungen:

TITLE:

Kamera V3 komplett Bemaßung

Größe	Zeichnungsnummer:	REV
A		
Maßstab: 1:2	Gewicht:	Seite 1von1

NOTES:
1. PACKAGING LABEL TO BE APPLIED BY BRIGADE HQ WAREHOUSE.
2. DIMENSIONS IN SUPPLIER DRAWING ARE NOMINAL AND NOT CONTROLLED BY BRIGADE.
3. THIS DRAWING IS FOR RELEASE PURPOSES ONLY AND MAY NOT ACCURATELY REPRESENT THE PRODUCT.
4. CAMERA NOT SUPPLIED AS PART OF THIS PART NO.

PROPRIETARY NOTICE
THIS DESIGN AND TECHNICAL INFORMATION APPEARING ON THIS DRAWING IS THE PROPERTY OF BRIGADE ELECTRONICS, AND IS DISCLOSED IN CONFIDENCE. IT IS NOT TO BE COPIED, REPRODUCED, REVEALED TO OR EXPROPRIATED BY OTHERS, EITHER IN WHOLE OR IN PART WITHOUT THE EXPRESS WRITTEN CONSENT OF BRIGADE ELECTRONICS.

Sheet No 1 of 2

BRIGADE®
www.brigade-electronics.com

Angle of Projection
Third Angle

Assembly Pl Approval	Approved by	Checked by	Drawn by
-	S.MATTHEWS	G.PLITH	R.BATES

Units	Scale	Released	Assembly Ref
mm	N/A	26/03/13	-

Status	
RELEASED	VCH-000
Part No 4394	BE-002382-00-13

FrameV2